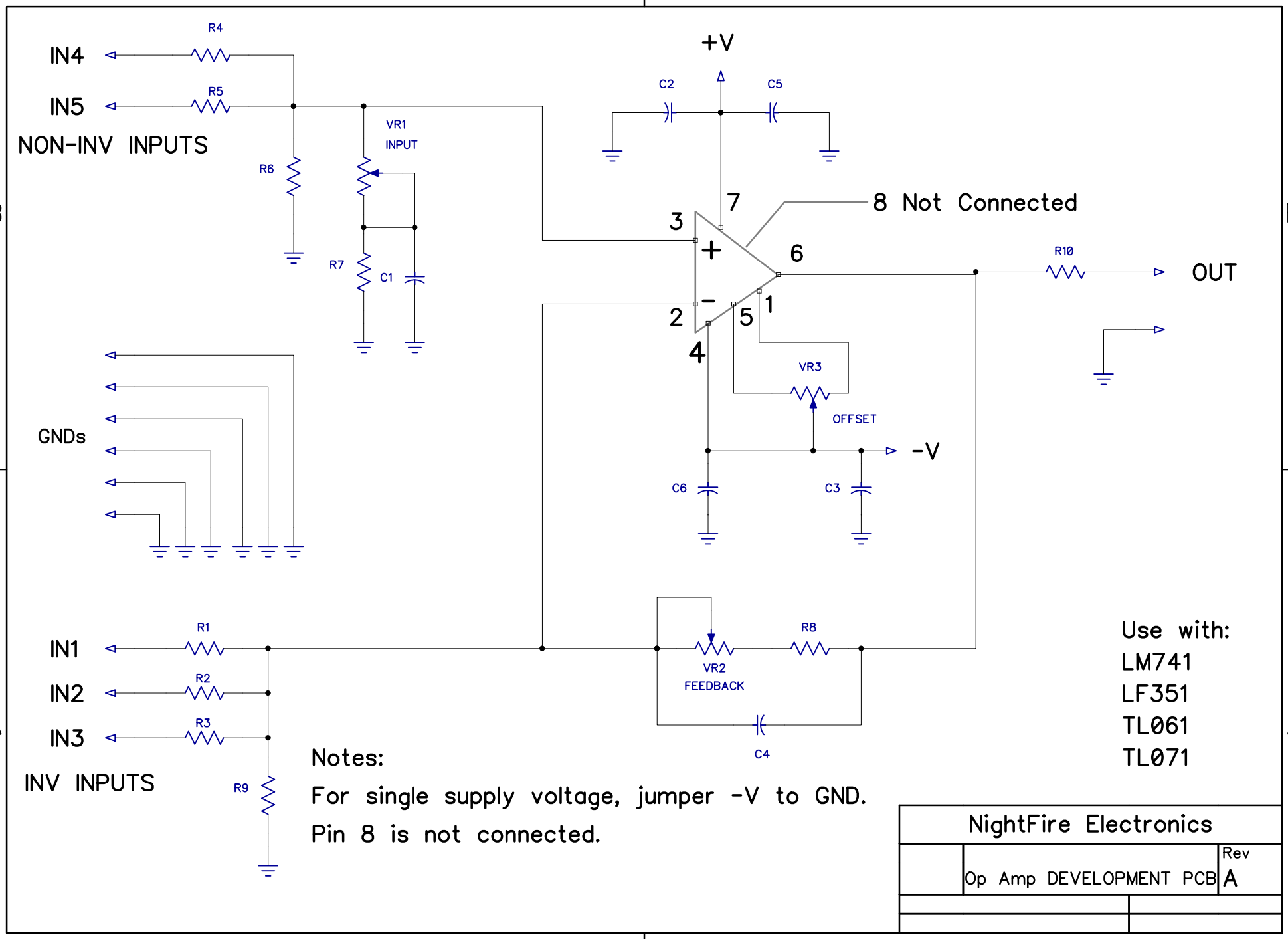

Notes:

For single supply voltage, jumper -V to GND.

Pin 8 is not connected.